Instruction Sheet

SEATEK Co. Inc.

RSK-145 ROTO-SKINNER

U.S. Patents # 4,267,636 & # 4,142,290

THANK YOU FOR PURCHASING A FINE U.S. DESIGNED TOOL
FROM THE PEOPLE WHO PIONEERED THE FIRST PRACTICAL BX CUTTER

Please spend a few minutes reading these instructions to learn
how to get years of satisfaction from the RSK-145 Roto-Skinner

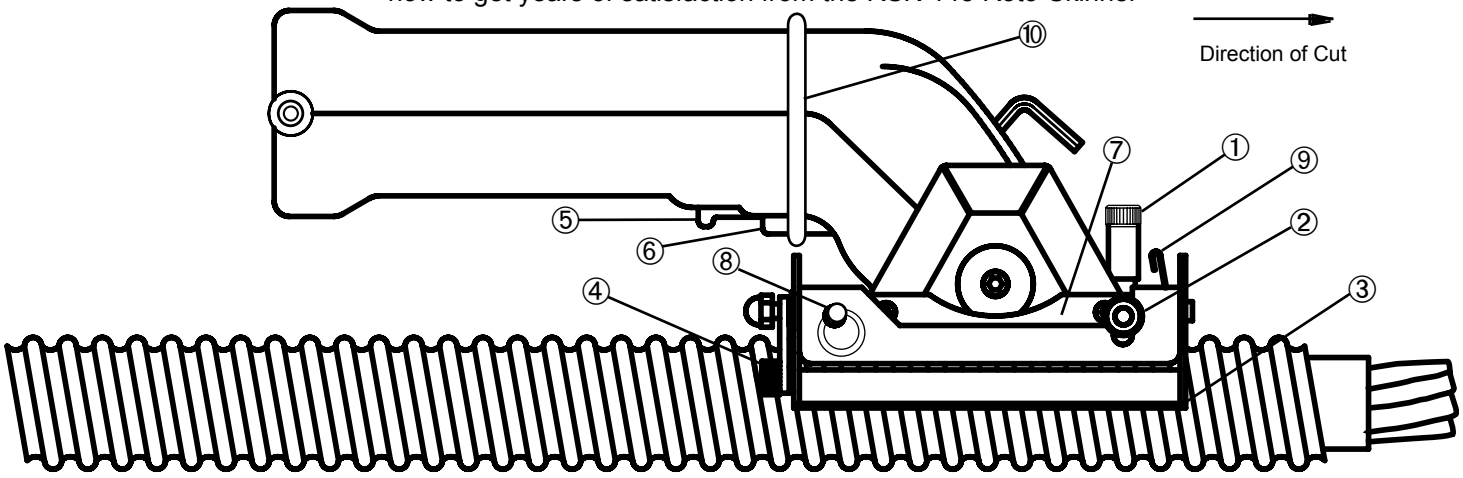

HOW TO STRIP CABLES USING THE ROTO-SKINNER

For cables from 1/2" to 12" O.D. or 13mm to 300mm O.D.

This portable tool was especially designed to slit the jacket of all power cables such as non-metallic PVC, etc. or metallic aluminum or steel armored cables such as Okonite CLX and Rockbestos Flexgard cables - plain or encased within a plastic jacket. Cables from **1/2" to 12" in diameter** can be slit easily by the **Roto-Skinner**.

This tool is battery operated and the 14.4V battery pack can be recharged in one hour. Since the **Roto-Skinner** motor is enclosed and double insulated this tool can be used safely on the job site where non-sparking tools are a must. To remove the battery pack simply squeeze the 2 tabs on the sides of the battery and slide out.

STEP 1 - Adjusting Depth of Cut

a. Use the cable's manufacturer's data sheet to find the jacket thickness or measure the jacket thickness.
b. When the top of the tool is fully depressed the blade must protrude by the exact amount of the cable's jacket or armor thickness
c. Each turn of the adjustment screw ① is equal to .030". Turn the adjustment screw ① counter-clockwise until blade is set to the proper depth of cut
d. Lock thumb screw by turning knob ② clockwise until it locks against bushing

If you cannot measure the cable jacket thickness or data is not available make shallow trial cuts as described in Step 2 and adjust screw ① until the proper depth of cut is reached.

STEP 2 - Adjusting Cable Guide

a. Adjust the indexable cable guide ③ by untightening the locking lever ④ and swinging the cable guide until the cutting blade is centered over the cable.
b. Re-tighten the locking lever ④ securely

Note: cables smaller than 1" O.D. should be clamped to a fixed structure while slitting is performed. Grip-lock tool clamp, Cat. #CL-154 can be purchased for this application.

STEP 3 - Stripping Cables

WARNING!!! **Never attempt to cut already installed cables, since any contact between a live wire and ground can be lethal.**

Note: Always **push forward** while cutting, **do not push too hard to avoid stalling the motor** & to preserve battery life

a. For the most efficient cutting action lay down the cable on the edge of a bench or any similar surface.
b. Place the tip of the cable guide assembly on top of the end of the cable, exert a downward pressure to deflect the cable guide assembly until it is stopped by the depth of cut control knob.
c. Slide the **Roto-Skinner** forward until contact is made with the cable, slide the safety lock ⑤ backward & squeeze the trigger ⑥ to start the motor running. Push forward steadily and smoothly until the desired length is stripped.

STEP 4 - Welded Armored Cables

Note: Cables such as CLX or armored fiber optic cables require cutting both sides of the cable.

a. Make first cut along the length of armored cable to be stripped as described above in Steps 1 to 3, stop the motor.

b. **Short Lengths:** Flip the cable over 180° and make a second cut the same length as the first cut. Stop the motor and remove the **Roto-Skinner**. Follow Step D to remove the armor casing.

c. **Long Lengths:** Save time by making a plunge cut 180° from the end of the first cut and stripping towards the end of the cable. The **CL-154** Grip-Lock Tool can be clamped behind the **Roto-Skinner** to guard against kick back. Start the motor and slowly make a plunge cut. Slit the armor all the way to the end of the cable, stop the motor and remove.

d. **Removing Armor:** If the cable has a plastic jacket ring cut it with a knife to remove it. Score the outside of the aluminum armor near the end of the saw groove. Peel back the armor like a clamshell moving it back and forth until it separates from the cable. Our **RSK-150RC Roto-Skinne**r can also be used to make perfect ring-cuts.

Replacing the B-151 Blade

CAUTION!!! **Make sure that you remove the battery pack from the Roto-Skinner before attempting to replace the circular blade**

a. Remove the battery pack and swing down the cable guide assembly by pushing the spring latch forward

b. Remove the cap screw holding the blade and washer using the provided allen wrench. Tap the wrench with a small plastic tipped hammer in a counter-clockwise direction until the screw loosens.

c. Remove the washer and slide out the blade. Replace the blade and reinstall with the arrow on top. Reorder Cat. No. **B-151** blades.

<u>WARNING:</u> Never run the motor unless the tool is placed on top of a cable or attempt to use the Roto-Skinner without the blade guard in place

Accessories:

- **B-151** Replacement Blade
- **BP-153** Battery Pack
- **C-154** Battery Charger
- **CL-154** Grip-Lock Tool Clamp

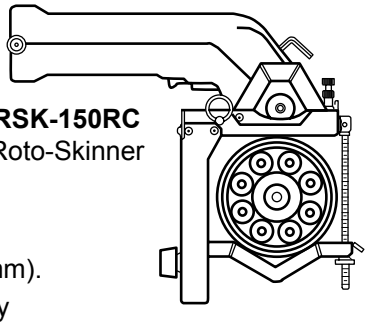

RSK-150RC
Roto-Skinner

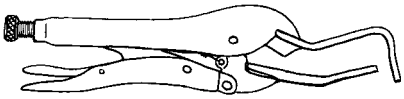

Grip-Lock Tool
Cat. **CL-154**

Specifications:

- Accepts cables from 1/2"(13mm) to 12"(300mm).
- Weight 6 lbs. (2.7kg) complete. 14.4V Battery
- Grip-lock adjustable clamping tool is available to secure the cable & guard against kick back. Order Cat. **CL-154.**

LIMITED WARRANTY:

The Roto-Skinner has a limited warranty against defects for 90 days. During that time any part except battery pack, battery charger and the circular cutter will be replaced free. You pay only the shipping charges. We stand behind our products and we will never let a customer down. If you have any

SOME OF OUR NEW PRODUCTS IN STOCK FOR IMMEDIATE DELIVERY

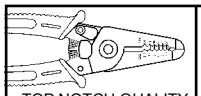 TOP NOTCH QUALITY	NEW! MW-S10-S	MULTIPURPOSE PLIERS, CUTTER, & WIRE STRIPPER. STRIP WIRES FROM 10 TO 20 AWG AND CUT WITH SHEARING KNIFE EDGE. PULL WITH BUILT-IN PLIERS. OVERALL LENGTH IS 5-1/2"	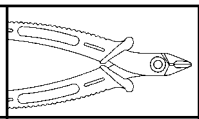	NEW! DP-512-B	DIAGONAL PLIERS TO CUT HEAVY GAGE COPPER WIRE UP TO 12 AWG. OVERALL LENGTH OF PLIERS IS 5". BLUNT CUT.
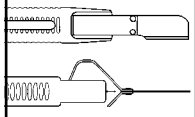	NEW! RS-828-KB	ROUND CABLE STRIPPER. STRAIGHT & RING-CUT CABLE FROM 5/16" TO 1". STRIP JACKETED CABLES, PVC, RUBBER, ETC.	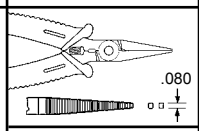	NEW! ML-NP6-T7	PROFESSIONAL NEEDLE NOSE PLIERS. LENGTH OF JAWS 1-1/4". OVERALL LENGTH OF PLIERS IS 5-1/2". HEAVY DUTY CONTOURED HANDLES.
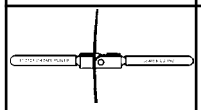 *"HINGENIOUS"*	FT-210	CAM ACTION, HINGED FISH TAPE PULLER, TWO HANDED ACTION FOR TWICE THE PULLING FORCE. MUCH SAFER AND PREVENTS KINKS IN TAPE.	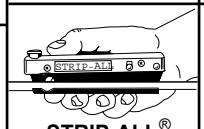 **STRIP-ALL®**	SA-200	STRIPPER FOR JACKETED CABLES (PLASTIC, TEFLON OR RUBBER). STRAIGHT & RING CUTTING FROM 1/4" TO 5/8" DIA. WITH WIRE STRIPPER, FOLDING KNIFE BLADE & REPLACEMENT BLADE. PRECISION DEPTH OF CUT ADJUSTMENT.
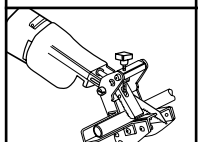 **MIGHTY-MITER ®**	NEW! MM-175	CONSISTS OF AN ADJUSTABLE VISE THAT SECURES THE MATERIAL TO BE CUT WITH AN ADJUSTABLE QUICK CLAMPING SYSTEM. RANGE FROM 3/16" TO 2". THIS ACCESSORY FITS MILWAUKEE® BRAND RECIPROCATING SAWS INCLUDING THE 18 VOLT CORDLESS AND SUPER SAWZALL.®	**SWING-SAW ®**	SW-130	COMPACT HAND TOOL TO CUT SQUARE ANY LIQUID TIGHT CONDUIT. CAN BE USED ON PLASTIC, COPPER, ALUMINUM & STEEL TUBING, THREADED RODS, EMT CONDUIT, SURFACE RACEWAYS ETC. MAXIMUM VISE JAW OPENING 1-1/2". BLADES ARE EASILY

Sawzall ® is a registered trademark of the Milwaukee ® Electric Tool Company

SEATEK Co. Inc.

A SMALL COMPANY WITH BIG IDEAS ®

392 PACIFIC STREET, STAMFORD, CT 06902

PHONE (203) 324-0067 ☆ FAX (203) 324-7844 ☆ *www.SeatekCo.com*