INSTRUCTION SHEET
REPLACEMENT BLADE BZ-112
ZIP-STRIPPER®
MODELS ZS-140 & NM-180

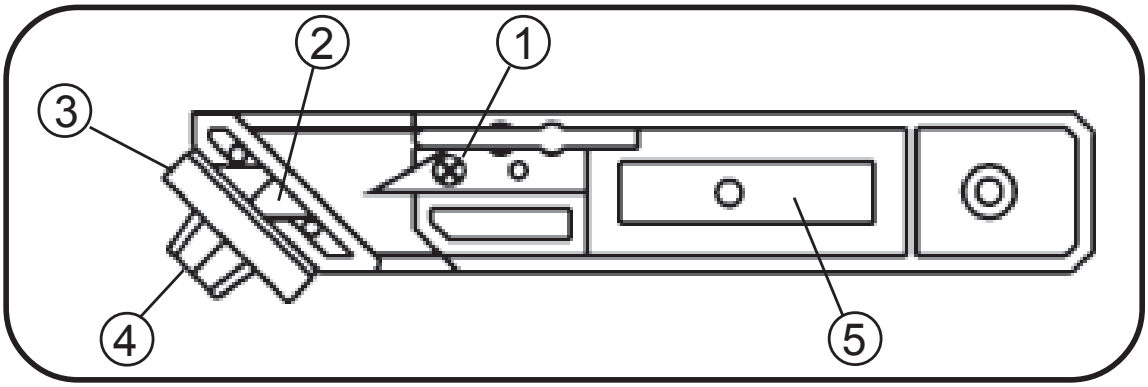

To replace the blade turn the black knob ④ to #1 and turn the yellow knob completely counter clockwise. Remove the four screws holding the two halves of the Zip-Stripper. Slide off the adjusting knob assembly ③, open the Zip-Stripper by pulling apart the two plastic halves. Remove the screw 1 holding the blade in place and set aside. Change the blade and refasten the screw. *(For your convenience a blade storage compartment ⑤ is provided inside the Zip-Stripper. After replacing a worn blade, a new container of blades can be conveniently stored there.)*

To reassemble, push the two halves together and then hold the Zip-Stripper with the label facing up. While holding the tool in this position reinstall the adjusting knob assembly ③. *(Keep the side threaded holes on the same side as the Zip-Stripper label).* Wiggle it until the prongs ② slide into the cam slots. *(The black knob must still be set to #1).* Flip the tool over and reinstall the longer screws through the knob assembly ③ and the shorter screws into the main body. *(Please note that all the screw heads are on the same side of the tool.)*

SEATEK Co. Inc.

392 Pacific Street
Stamford, CT 06902

PHONE (203) 324-0067 FAX (203) 324-7844